Allot Multiservice Platforms

SG-Tera II

Empowering Rapid Deployment for Service Innovation at Carrier Grade Scale

As a fixed, mobile, or converged operator, you need to deploy new services rapidly and at the highest level of quality. SG-Tera II enables this for all aspects of current and future services and applications, delivering detailed network visibility and traffic management that enable cyber and user path protection, QoE assurance, policy control and charging, service function chaining, 5G Gi-LAN services and more. Allot's 'next generation' SG-Tera II brings to you the latest service gateway functionality with unprecedented capacity of more than 1Tbps per single platform.

Standard COTS-based architecture

Using standard network Smart Load Balancers and COTS-based architecture reduces your cost of deployment and provides best-in-class price/performance characteristics, compared to other bare metal or virtual solutions.

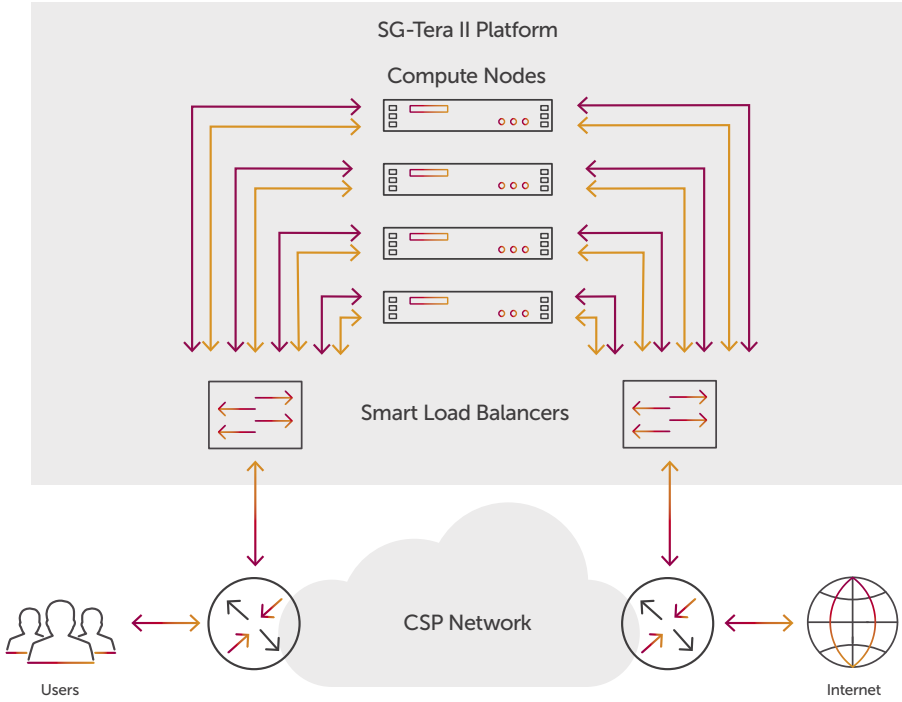

Easy upgrade path

SG-Tera II uses Compute Nodes based on the same hardware as our leading SG-9700 appliance. As a result, it is very easy to upgrade/convert your current Allot SG-9700* deployment to SG-Tera II. All you need is to add two Smart Load Balancers (SLBs) and the necessary amount of Compute Nodes and you will have a new platform that will satisfy your future capacity and processing power requirements.

* Only SG-9700 type B (8x100Gbps, 8x10Gbps) is upgradable to SG-Tera II

Functionality

Accurate Traffic Visibility and Policy Control

Allot's Dynamic Actionable Recognition Technology (DART) engine, embedded in the platform, gives you granular visibility of application, user, device, quality-of-experience (QoE), and network topology traffic. Allot's extensive signature library accurately identifies hundreds of Internet applications and protocols, and also supports user-defined signatures. Frequent and automated updates to the signature library keep Allot Service Gateways up to date with the latest application and internet developments, ensuring accurate traffic detection and classification. Moreover, Allot's flexible and powerful Policy Editor makes it easy for you to provision and enforce real-time Quality of Service (QoS), steering, metering, and charging policy with equal granularity.

Asymmetric Traffic Support

The Allot SG-Tera II architecture inherently solves the issue of asymmetric traffic (intra-site), enabling visibility and enforcement of subscriber and application policies in the case of inter-site asymmetry across multiple platforms.

Encrypted Traffic Classification

Allot's superior traffic classification proactively learns and adapts to the changing tactics of traffic encryption that are widely used by internet services and data privacy applications. From heuristic analysis of IP flow behavior to peer learning and predictive DPI, Allot's synergistic inspection methods provide highly granular and accurate recognition of encrypted traffic, even at maximum speeds and peak loads.

Intelligent PCEF/TDF

Compliance with 3GPP standards and interoperability with most PCRF systems enable Allot SG-Tera II to provide intelligent Traffic Detection Function (TDF) and Policy and Charging Enforcement Function (PCEF) in mobile data networks. As a result, network operators can leverage Allot's granular traffic classification and metering to enrich the policy decisions of PCRF elements, and to enhance the charging capabilities of online and offline charging systems (OCS, OFCS).

Functionality

Smart Data Records

From its vantage point in the network, Allot SG-Tera II collects and can export a rich variety of high-resolution usage data, including real-time transactions per user, per application, per device, per video session, per VoIP and instant messaging session, per web session, and more. Network data records may be exported in standard formats to business intelligence systems, such as Allot ClearSee Network Analytics and other operator systems, for further investigation and analysis. The frequency and triggers for data record export are configurable parameters, giving operators ready access to usage data that is critical to the business. The data records coming from Allot SG-Tera II are configurable and may be customized by Allot Data Science Services for any destination or use case requirements.

5G Gi-LAN Services

When building new 5G networks, many service providers seek to deploy non-core, value-added services across the Gi-LAN network segment. In this scenario, the SG-Tera II can be located on the N6 interface (between the UPF and internet router) to simplify VAS chaining. The Gi-LAN network segment can thus more easily provide enhanced 5G security and value-added service offerings to differentiate and monetize services. For service providers, it is critical to have an efficient Gi-LAN architecture to deliver a high-quality service experience. Having a single point of VAS control and management supports high flexibility and redundancy between different value-added services. A key advantage of the SG-Tera II is the ability to use 5G core control information in the non-5G core segment of the network.

Service Function Chaining (SFC)**

Allot SG-Tera II can act as a SFC classifier, SFF, and SFC proxy for delivering innovative services functions with exceptional quality of experience to any subscriber over any access and at any scale. Allot's solution enables the use of NSHs to carry important metadata information, like application, congestion status or subscriber information, and share it with other network elements in the network. The platform also supports real-time traffic steering to third-party applications or virtualized services and enables seamless service chaining so your ability to craft differentiated service plans is practically unlimited. As a single point of integration for service delivery, Allot SG-Tera II minimizes interoperability and integration issues to facilitate fast and efficient service rollout.

User Path Protection

Allot's 5G NetProtect and DDoS Secure instantly detect and block both inbound and outbound DDoS attacks. Machine learning and artificial intelligence learn normal traffic behavior, enabling rapid, accurate detection and mitigation of abnormal attack traffic.

5G NetProtect and DDoS Secure are able to:

- Thwart both inbound and outbound attacks inline, within seconds, before they disrupt network service
- Inspect 100% of network traffic to foil every volumetric attack
- Utilize machine learning and artificial intelligence to detect even unknown attacks
- Combine DDoS mitigation with DPI-based traffic management to preserve legitimate traffic and service quality
- Provide unrivalled scalability so you can mitigate even large terabit-scale attacks from multiple vectors
- Offer 24/7 support with an Emergency Response Team (ERT)

** Roadmap feature

SG-Tera II - fully populated platform specification (8+1)

Platform Configuration	
Compute Nodes	9 (8 active + 1 standby)
Network SLBs	2
Capacity	
Throughput per Platform***	1.2 Tbps
Number of flows	600,000,000
CER (Connection Establish Rate)	3,600,000 Cps
Number of Active Subscribers	34M
Number of Lines / Pipes / Virtual Channels	512 / 42,000,000 / 84,000,000
Interface Types	
Ethernet Interfaces	40x100Gbps (QSFP28) 100GBASE -SR4/LR4 or 96x10Gbps (SFP+) 10GBASE -SR/LR
Management	2x10Gbps or 2x100Gbps
Availability	
Hardware Bypass	Up to 8 independent, passive bypass units****, supporting either 16 SM fiber-optic ports (8 links), or 24 SM fiber-optic ports (12 links) per unit or 6 MM fiber-optics ports (3 links, available in Q2 2023)
High Availability	N+M redundancy of Compute Nodes (N+1 if bypass used)
Management	Active Standby HA on management ports
SLBs	1+1 SLB redundancy
Dimensions	
Compute Node (9 units) Standard 19" rack mount	2U (18U per 9 CN) LxWxH 67.94x44.54x8.73cm (26.75x17.54x3.44 inch), without Bezel, 14.9Kg
SLB (2 units) Standard 19" rack mount	2U (4U per 2 units) LxWxH 61.2x43.84x8.77cm (24.1x17.26x3.45 inch), depth including fan handle; otherwise 22.83 in. (58 cm), 14.1Kg
HD-16 port Single Mode Bypass Unit	External 1U 19" rack mount LxWxH 439.5x145x43.6mm, 3kg (6.6lb)
HD-24 port Single Mode Bypass Unit	External 1U 19" rack mount LxWxH 439.5x145x43.6mm, 3kg (6.6lb)
Power Supply	
Compute Node DC	-48 DC nominal
DC redundancy	1+1
Compute Node AC	100 – 240V AC nominal (85V to 265V AC), 50/60Hz
AC redundancy	1+1
SLB Power supply summary	Redundant (1+1) hot-pluggable 1100 W AC/DC power supplies 110-240V single phase AC power, -36 to -72V DC power
Power Consumption	
Compute Node	800 W
SLB	1100 W
Max Power Consumption per cluster of 8 CN	9400 W
Standard Compliance	
Safety	UL60950 CE CB
EMC	FCC, CE, VCCI, ICES
Environmental	RoHS, China RoHS, WEEE, REACH

*** Actual throughput and performance metrics depend on enabled features, policy configuration, traffic mix, and other deployment characteristics.
**** To avoid misconfiguration, please read SG-Tera II User Manual before ordering any Bypass Units.

May 2023. Applicable for Allot Smart R17.5.

© 2023 Allot Ltd. All rights reserved. Specifications subject to change without notice. Allot and the Allot logo are registered trademarks of Allot. All other brand or product names are trademarks of their respective holders.